TAFR60S– 60cm Front Recirculating Slideout Range Hood

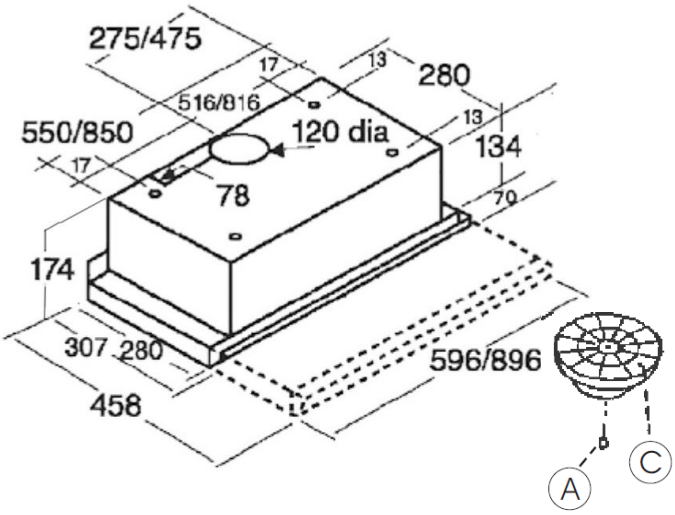

PERFORMANCE

3 Fan Speeds
Maximum Air Flow 370m³/hr
Spigot Exhaust Outlet Diameter 120mm

CONTROL

Suitable for Recirculating or Fully Ducted
Slider Controls
1 x 5.5W ECOLED Light

CLEANING

Stainless Steel Finish
Dishwasher Safe Aluminium Grease Filter

INCLUDED ACCESSORIES

Carbon Filter included
Back Draught cover included

TECHNICAL SPECIFICATIONS

Voltage	V	230 – 240
Maximum Power	W	125
Lighting	W	1x 5.5W ECOLED
Maximum Air Flow	m³/h	370
Static Fan Pressure	Pa	
Spigot Exhaust Outlet Diameter	mm	120
Warranty		2 Years

The product dimensions and specifications on this page apply to the specific product and model at the time of issue. These dimensions and specifications may change at any time.
**Diagrams are a guide only. Final fittings should be made with actual product.*

DēLonghi